Wiring Diagram

Standard

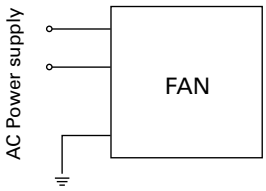

with Sensor

(For fan power supply)

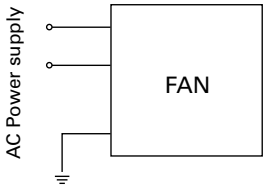

5V (ITEM-20)

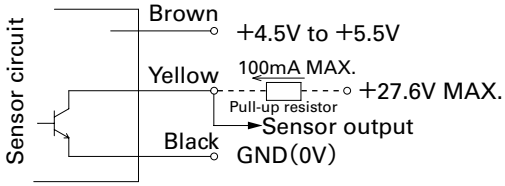

12V (ITEM-30)

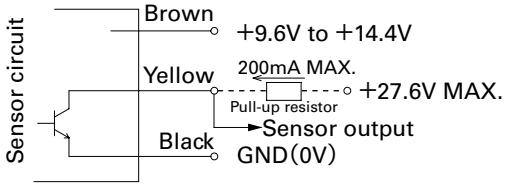

GND (Black) should be shared in case that power supply for sensor circuit (Brown) and that for sensor pull-up (Yellow) are separated.

Options (unit: mm)

Finger Guards

Model : 109-619E Surface treatment : Nickel-chrome plating (silver)
: 109-619H : Cation electropainting (black) Color

Inlet side, Outlet side

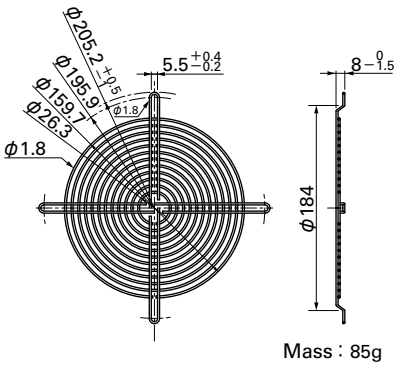

Mass : 85g

Model : 109-620 Surface treatment : Nickel-chrome plating (silver) Color

Outlet side

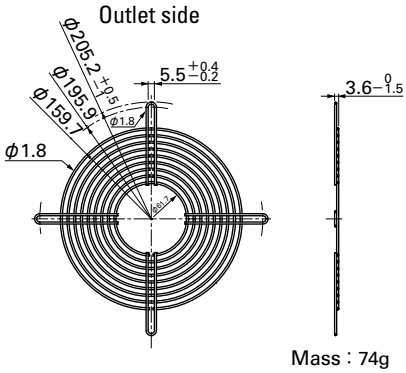

Mass : 74g

Plug Cord

(UL/CSA CERTIFIED))
UL FILE No.E50197 CSA FILE No.LR67048
Model : 489-084-L10/489-084-L21

Flat 2-core vinyl cord
ULSPT-1
AWG18 Black

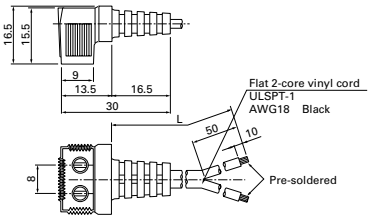

Model	Power cord length (L) [mm]	Mass [g]
489-084-L10	1,000	37
489-084-L21	2,100	70
489-086-L10	1,000	37
489-086-L21	2,100	70

(UL/CSA CERTIFIED)
UL FILE No.E50197 CSA FILE No.LR67048
Model : 489-086-L10/489-086-L21

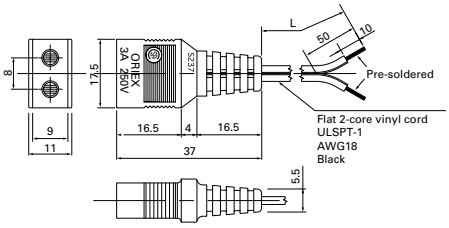

(Products compliant with Electrical Appliance and Material Safety Law)
Model : 489-1618-L10/489-1618-L21/489-1618-L28

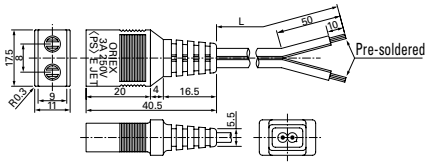

Model	Power cord length (L) [mm]	Mass [g]
489-1618-L10	1,000	34
489-1618-L21	2,100	63
489-1618-L28	2,800	83
489-1619-L10	1,000	34
489-1619-L21	2,100	64

(Products compliant with Electrical Appliance and Material Safety Law)
Model : 489-1619-L10/489-1619-L21

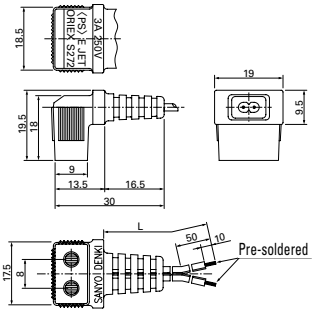

Airflow - Static Pressure Characteristics

Standard

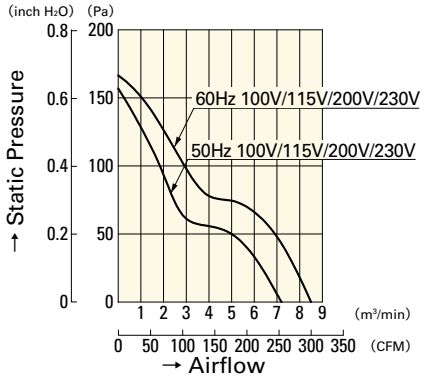

109-601	109-604
109-602	109-603

with Sensor

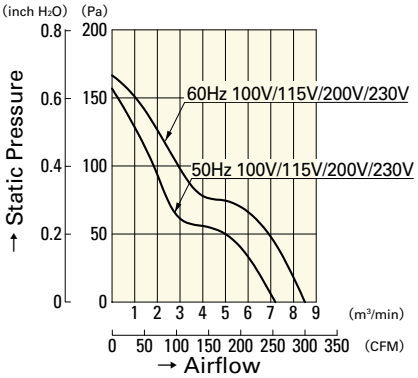

109-641	109-644
109-642	109-643